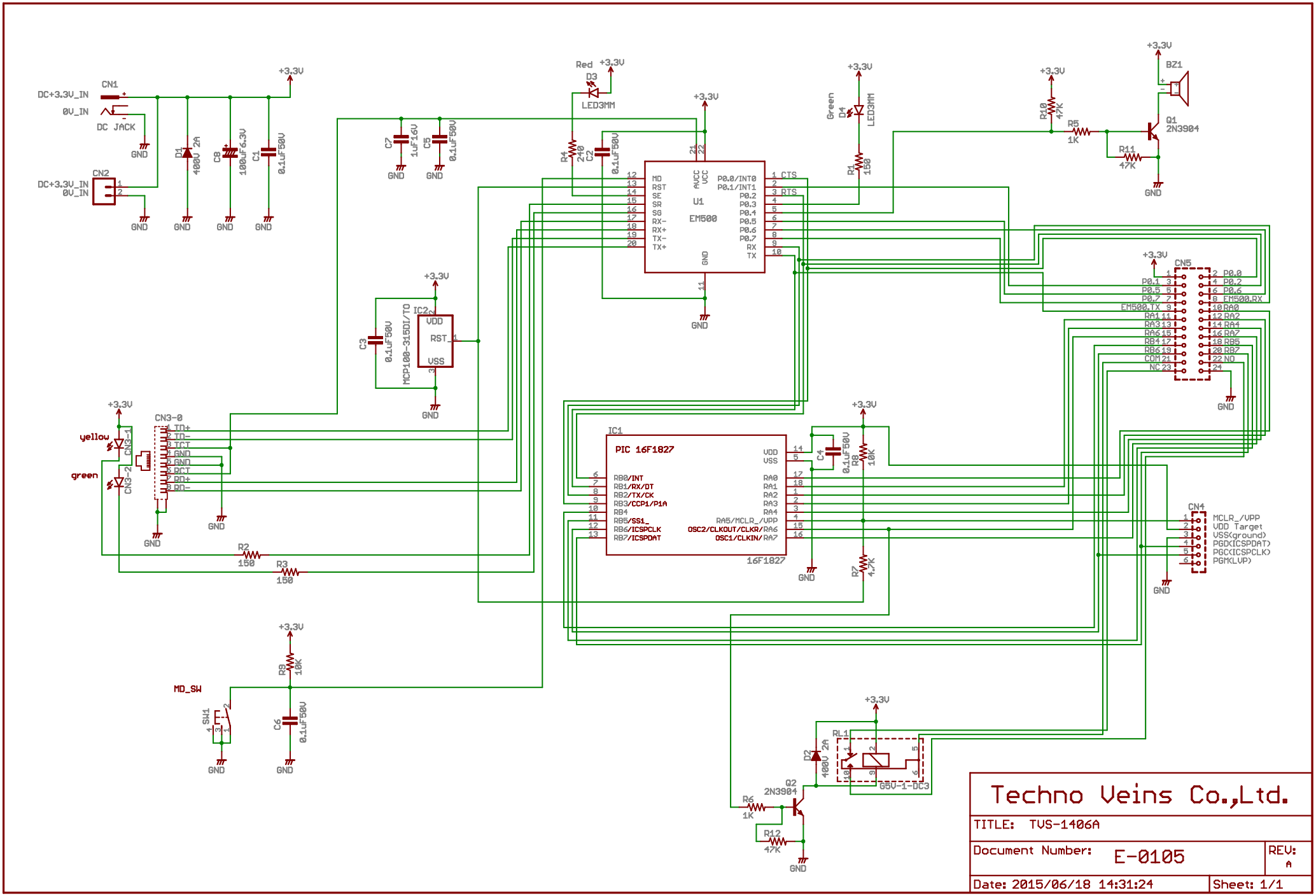

2015/06/18 14:50:06 f=0.70 C:\eagle-win-eng-4.16r2\projects\TVS-1406A_K\TVS-1406A.sch (Sheet: 1/1)